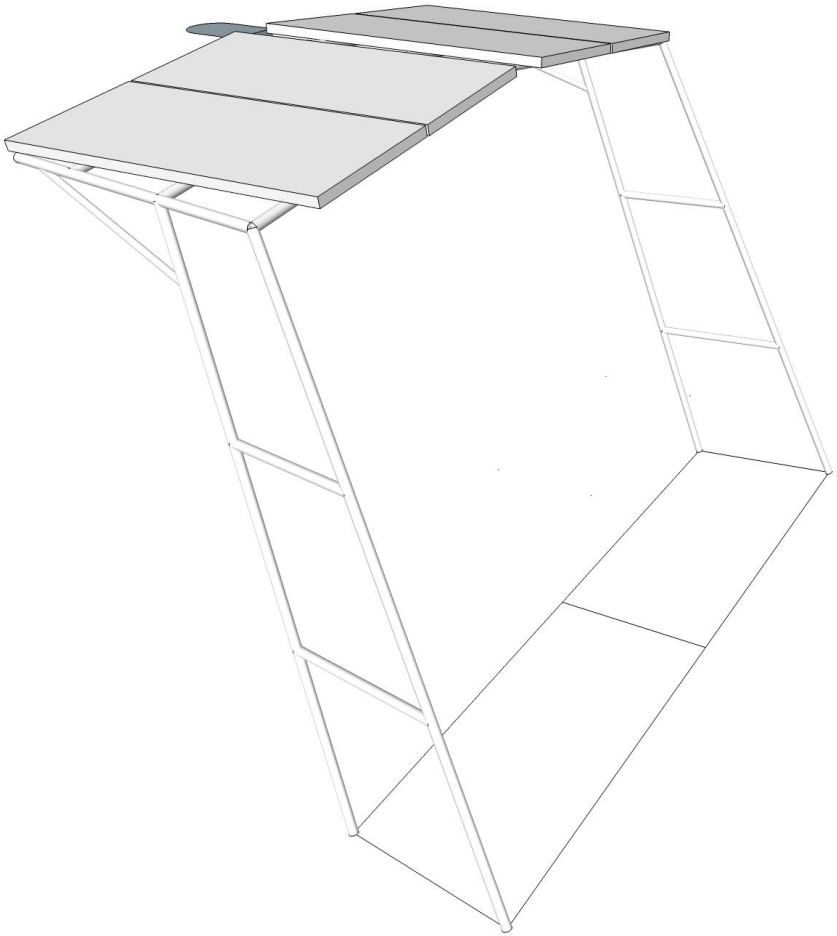

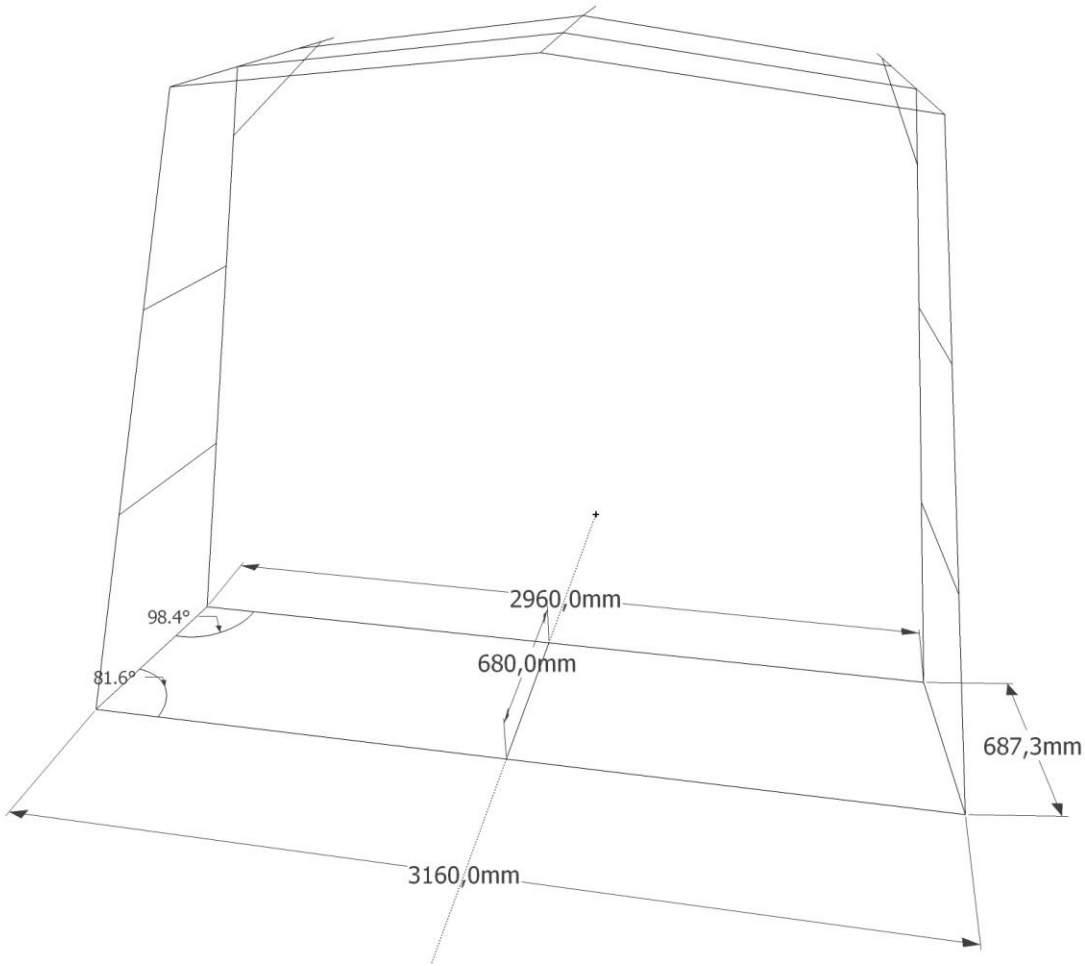
2960,0mm
98.4°
680,0mm
81.6°
687,3mm
3160,0mm

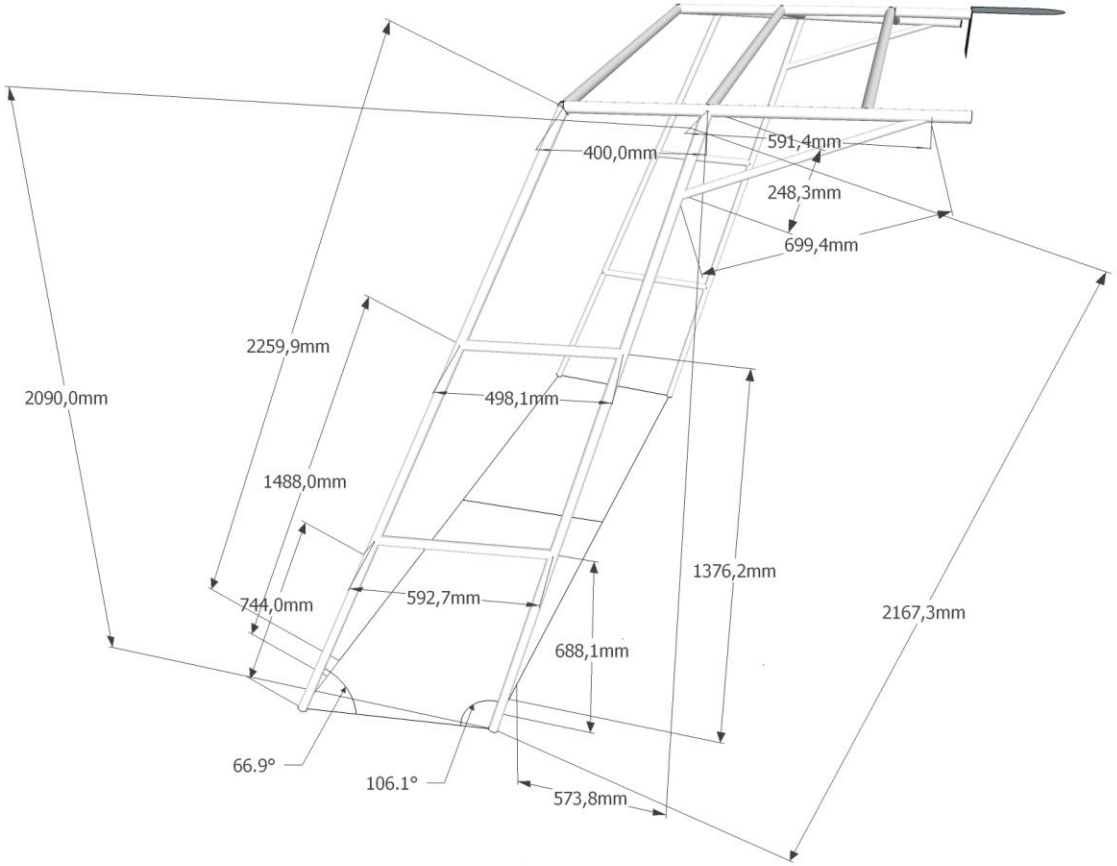
400,0mm
591,4mm
248,3mm
699,4mm
2259,9mm
2090,0mm
498,1mm
1488,0mm
1376,2mm
744,0mm
592,7mm
2167,3mm
688,1mm
66.9°
106.1°
573,8mm

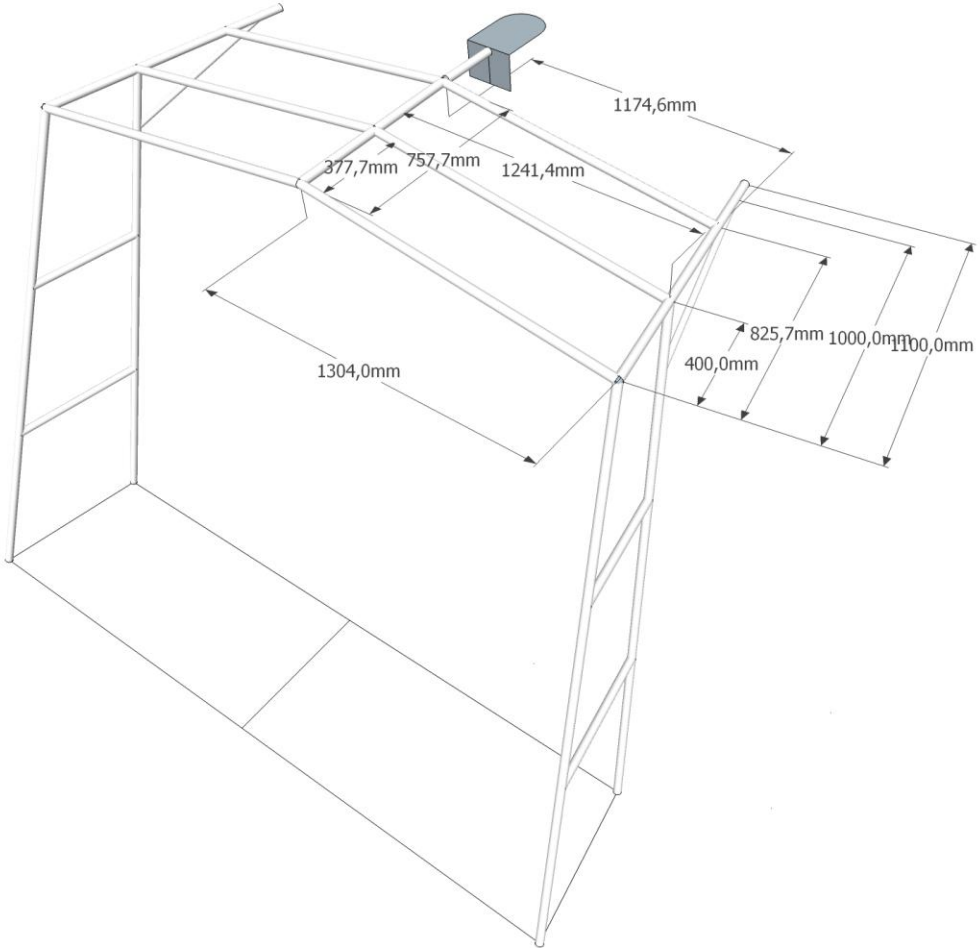
1174,6mm
377,7mm
757,7mm
1241,4mm
825,7mm
1000,0mm
1100,0mm
400,0mm
1304,0mm

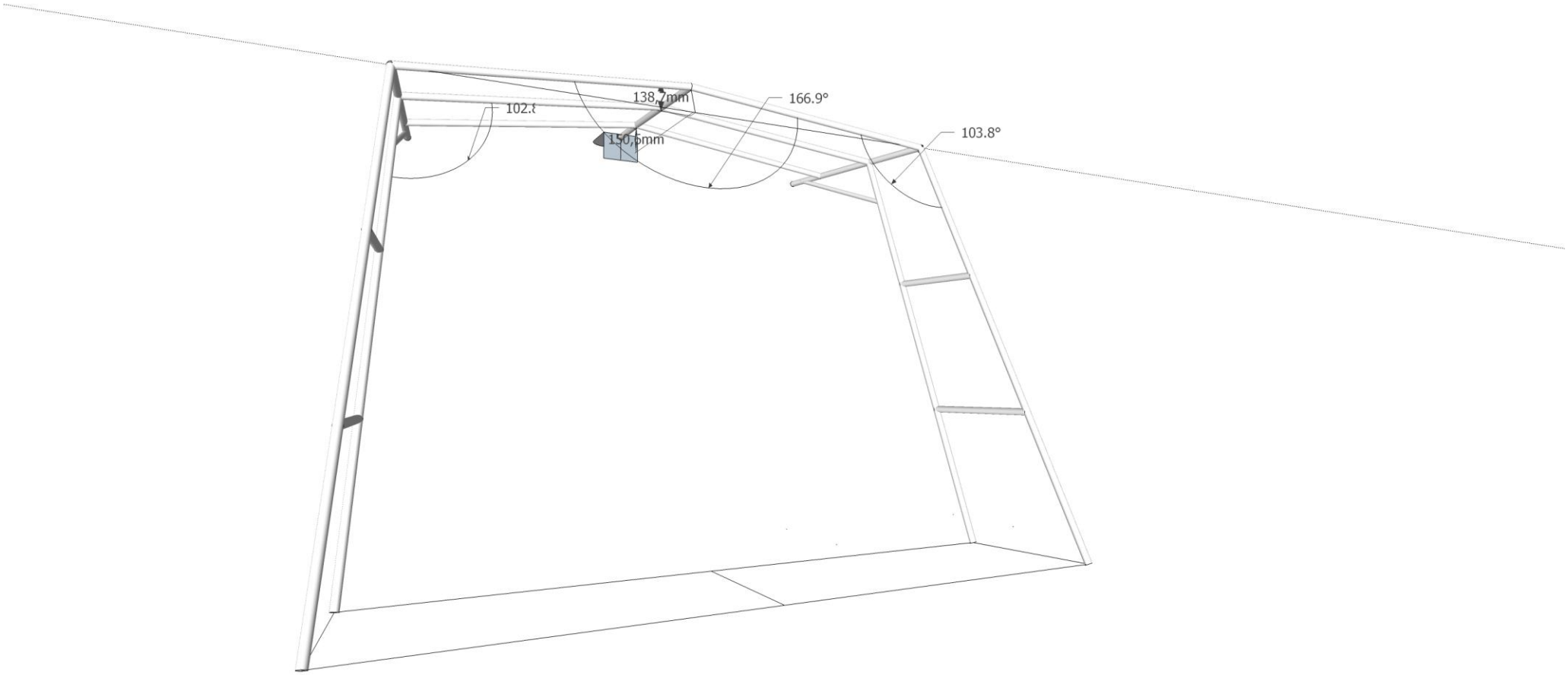
166.9°
103.8°